FASTECH FASTENERS TRADING
(SA 0478217-X)

Draw Latches

PAGE

Shallow Tab Roto Lock

- Progressively draws two panels together
- Designed for thinner material
- Provides air and water tight seals
- Adjustable to allow for manufacturing tolerances and gasket shrinkage
- Zinc plated plus bright chromate dip

* Latch and receptacle must ordered separately

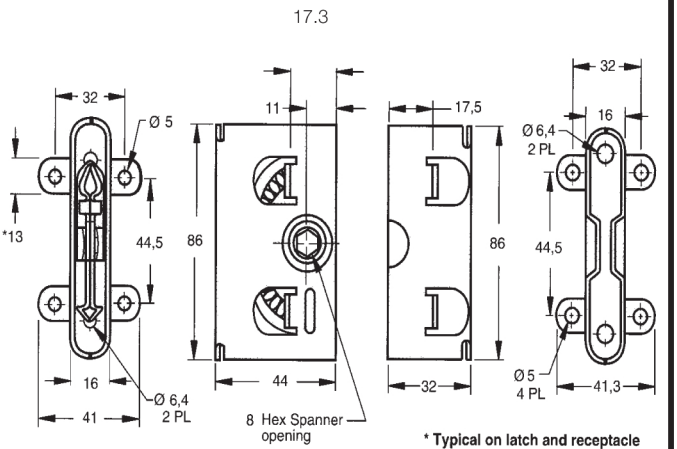

P/No.: R2-0259-02 (Latch)
P/No.: R2-0257-02 (Receptacle)

southco®